mm [inch]

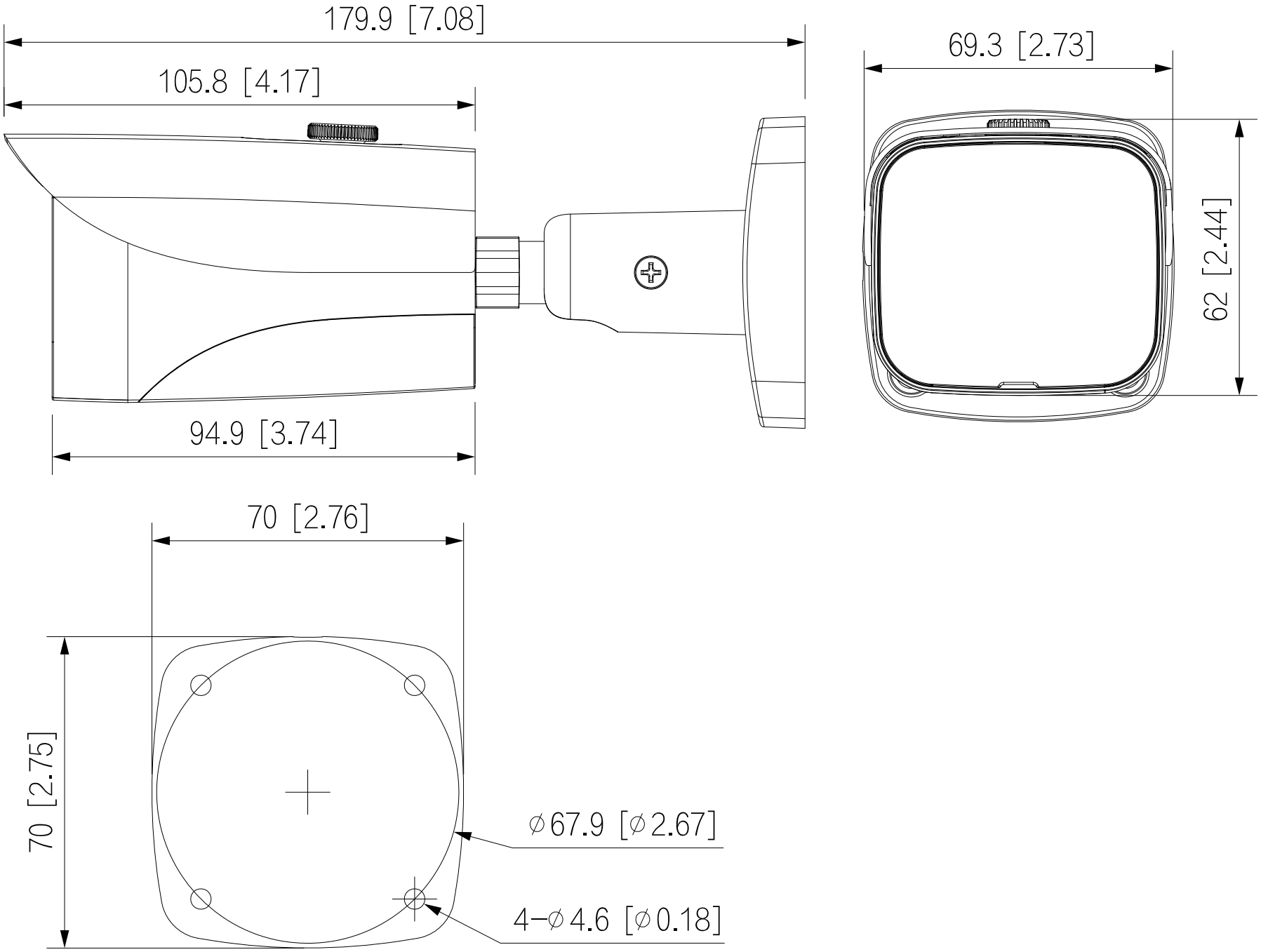
179.9 [7.08]
105.8 [4.17]
94.9 [3.74]
69.3 [2.73]
62 [2.44]
70 [2.76]
70 [2.75]
⌀67.9 [⌀2.67]
4−⌀4.6 [⌀0.18]